Calculite® Evolution Incandescent Open Downlight **C6AD**

6" Aperture A19 / A21 / BT15 / MB19 Reflector Trim

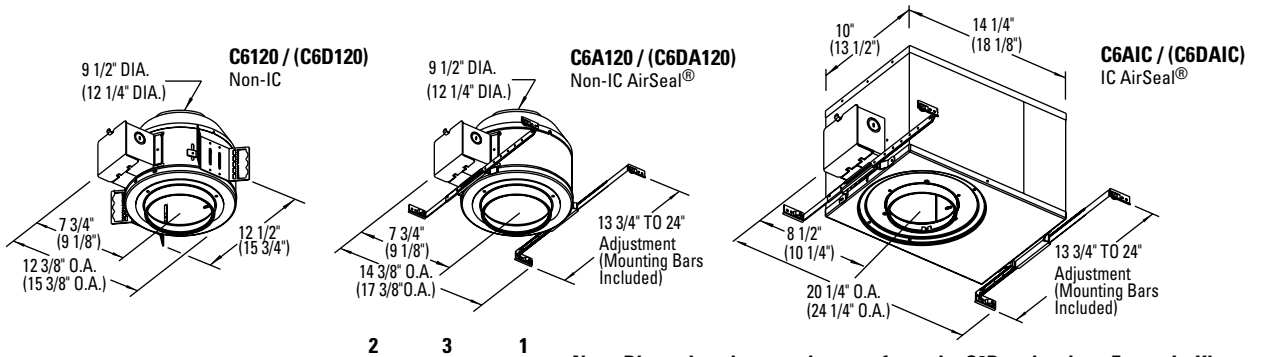

Note: Dimensions in parentheses refer to the C6D series deep Frame-In-Kits.

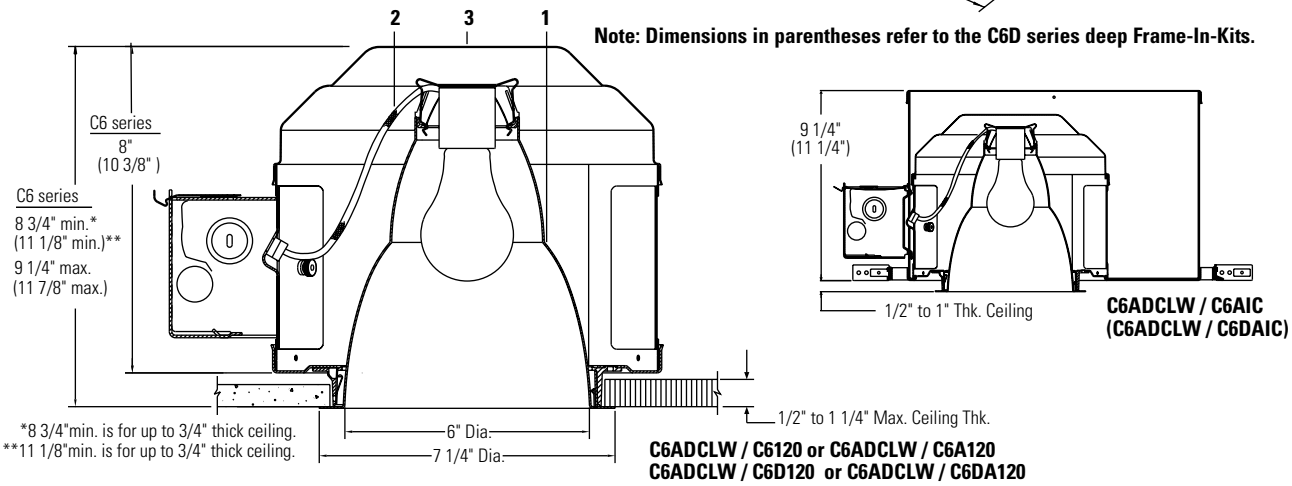

Ceiling Cutout: 6 11/16" Dia.

Reflector Trim		**Frame-In Kit**					
		Shallow Non-IC	Shallow Non-IC AirSeal®	Shallow IC-AirSeal®	Deep Non-IC	Deep Non-IC AirSeal®	Deep IC-AirSeal®
C6AD CLW	Specular Clear, White Flange						
C6AD CLP	Specular Clear, Polished Flange						
C6AD ☐	Add suffix. See options for other finishes.	**C6120**	**C6A120** 100W A19, MB19 100W BT15	**C6AIC**	**C6D120**	**C6DA120** 100W A19, BT15, MB19 150W A21	**C6DAIC** 100W A19, MB19 100W BT15 150W A21

Features

1. **Reflector:** 16 ga. aluminum, 50° visual cut-off to lamp and lamp image, medium spread distribution. Available with painted white or polished flange. Interchangeable with other Evolution 6" line voltage trims.
2. **Socket Harness:** Spring tension clips snap into die-cast aluminum top at pre-focused positions insuring correct optical alignment. Medium base porcelain socket with nickel plated screw shell, No. 18 SF-1 leads to keyed plug-in quick connector for power connection to junction box.
3. **Frame-in-Kit:** Compatible frame-in kits are listed above. See separate frame-in kit specification sheets for details.
   Non-IC and Non-IC AirSeal® - Insulation must be kept 3" away from fixture sides and wiring compartments and must not be placed above fixture in a manner which will entrap heat.
   IC-AirSeal® - Fixture may be in direct contact with insulation.

Options & Accessories

Reflector Finishes[1]

Clear:	CL
Comfort Clear Diffuse:	CCD
Champagne Bronze:	CCZ
Gold:	GD
White:	WH

[1]Specify desired flange: **W** White, **P** Polished

Labels

UL Listed (suitable for damp locations), I.B.E.W.

US Patent No. 5,957,573. Other US and Foreign Patents Pending.

Job Information **Type:**

Job Name:

Cat. No.:

Lamp(s):

Notes:

Lightolier a Genlyte company www.lightolier.com
631 Airport Road, Fall River, MA 02720 • (508) 679-8131 • Fax (508) 674-4710
We reserve the right to change details of design, materials and finish.
© 2007 Genlyte Group LLC • C0507

LIGHTOLIER®

SPACING RATIO = 1.1

CERTIFIED TEST REPORT NO. 0833FR
COMPUTED BY LSI PROGRAM **TEST-LITE**

RECESSED OPEN REFLECTOR DOWNLIGHT
6" DIA. APERTURE, SPECULAR CLEAR FINISH REFLECTOR
150W A-21 SYLVANIA LAMP. LUMEN RATING = 2780 LMS.

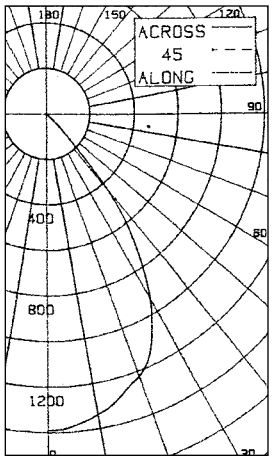

CANDLEPOWER SUMMARY

ANGLE	MEAN CP	LUMENS
0	1390	
5	1375	131
10	1338	
15	1284	364
20	1224	
25	1119	509
30	934	
35	696	432
40	422	
45	114	129
50	16	
55	3	5
60	1	
65	0	0
70	0	
75	0	0
80	0	
85	0	0
90	0	

ZONAL LUMENS AND PERCENTAGES

ZONE	LUMENS	% LAMP	% LUMINAIRE
0-30	1003	36.08	63.94
0-40	1434	51.60	91.46
0-60	1568	56.42	99.99
0-90	1568	56.42	100.00
40-90	134	4.82	8.54
60-90	0	.01	.01
90-180	0	.00	.00
0-180	1568	56.42	100.00

**EFFICIENCY = 56.4% **

Date: July 20, 1999
Prepared for Lightolier, Fall River, MA

Tested according to IES procedures. Test distance exceeds five times the greatest luminous opening of luminaire.

SPACING RATIO = 0.9

CERTIFIED TEST REPORT NO. 0835FR
COMPUTED BY LSI PROGRAM **TEST-LITE**
CALCULITE 6" DIA/ APERTURE BY-LAMP OPEN DOWNLIGHT
CAT. #C6AIC120/C6ADCLW, SPECULAR CLEAR FINISH REFLECTOR
100W BT15 PHILLIPS LAMP. LUMEN RATING = 1880 LMS. LOWER POSITION

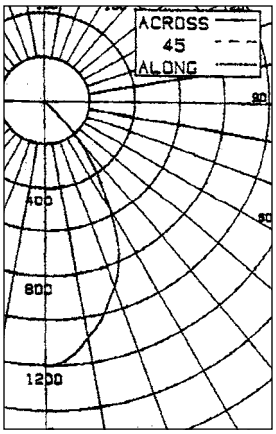

CANDLEPOWER SUMMARY

ANGLE	MEAN CP	LUMENS
0	1204	
5	1171	111
10	1090	
15	1002	283
20	897	
25	771	348
30	567	
35	394	250
40	239	
45	85	82
50	12	
55	2	4
60	1	
65	0	0
70	0	
75	0	0
80	0	
85	0	0
90	0	

ZONAL LUMENS AND PERCENTAGES

ZONE	LUMENS	% LAMP	% LUMINAIRE
0-30	741	39.42	68.82
0-40	991	52.75	92.08
0-60	1076	57.27	99.98
0-90	1076	5728	100.00
40-90	85	4.54	7.92
60-90	0	.01	.02
90-180	0	.00	.00
0-180	1076	57.28	100.00

**EFFICIENCY = 57.3% **

Date: July 19, 1999
Prepared for Lightolier, Fall River, MA

Tested according to IES procedures. Test distance exceeds five times the greatest luminous opening of luminaire.

COEFFICIENTS OF UTILIZATION

% EFFECTIVE CEILING CAVITY REFLECTANCE

ROOM CAVITY RATIO	80			70			50			30			10			0
% WALL REFLECTANCE	50	30	10	50	30	10	50	30	10	50	30	10	50	30	10	0
1	.63	.62	.61	.6	61	.60	.60	.59	.58	.57	.57	.56	.56	.55	.55	.54
2	.59	.57	.56	.58	.57	.55	.57	.55	.54	.55	.54	.53	.53	.53	.52	.51
3	.56	.53	.51	.55	.53	.51	.54	.52	.50	.52	.51	.49	.51	.50	.49	.48
4	.53	.50	.48	.52	.50	.48	.51	.49	.47	.50	.48	.47	.49	.47	.46	.45
5	.50	.47	.45	.49	.46	.44	.48	.46	.44	.47	.45	.44	.46	.45	.43	.42
6	.47	.44	.42	.46	.44	.42	.46	.43	.41	.45	.43	.41	.44	.42	.41	.40
7	.44	.41	.39	.44	.41	.39	.43	.40	.39	.42	.40	.38	.42	.40	.38	.37
8	.41	.38	.36	.41	.38	.36	.40	.38	.36	.40	.38	.36	.39	.37	.36	.35
9	.39	.36	.34	.39	.36	.34	.38	.35	.33	.38	.35	.33	.37	.35	.33	.32
10	.36	.33	.31	.36	.33	.31	.36	.33	.31	.35	.33	.31	.35	.33	.31	.30

20% FLOOR CAVITY REFLECTANCE

Conversion Factors
150W A21: Clear; C.U. x 1.0; Diffuse/Gold. C.U. x 0.90FL
60W - 100W A19: Clear; C.U. x 1.15; Diffuse/Gold. C.U. x 1.0FL

COEFFICIENTS OF UTILIZATION

% EFFECTIVE CEILING CAVITY REFLECTANCE

ROOM CAVITY RATIO	80			70			50			30			10			0
% WALL REFLECTANCE	50	30	10	50	30	10	50	30	10	50	30	10	50	30	10	0
1	.64	.63	.62	.63	.62	.61	.61	.60	.59	.59	.58	.57	.57	.56	.56	.55
2	.61	.59	.57	.60	.58	.56	.58	.56	.55	.56	.55	.54	.55	.54	.53	.52
3	.57	.55	.53	.56	.54	.53	.55	.53	.52	.54	.52	.51	.53	.51	.50	.49
4	.54	.52	.50	.54	.51	.49	.53	.50	.49	.51	.50	.48	.50	.49	.48	.47
5	.51	.48	.46	.51	.48	.46	.50	.48	.46	.49	.47	.45	.48	.46	.45	.44
6	.49	.46	.44	.48	.46	.44	.48	.45	.43	.47	.45	.43	.46	.44	.43	.42
7	.46	.43	.41	.46	.43	.41	.45	.42	.41	.44	.42	.40	.44	.42	.40	.40
8	.44	.41	.39	.43	.40	.38	.43	.40	.38	.42	.40	.38	.42	.39	.38	.37
9	.41	.38	.36	.41	.38	.36	.40	.38	.36	.40	.37	.36	.39	.37	.35	.35
10	.39	.36	.34	.39	.36	.34	.38	.35	.34	.38	.35	.34	.37	.35	.33	.33

20% FLOOR CAVITY REFLECTANCE

Conversion Factors
60W to 100W BT15: Clear C.U. x 1.00; Diffuse/Gold, C.U. x 0.90
60W to 100W MB19: Clear C.U. x 0.95; Diffuse/Gold, C.U. x 0.85

Job Information	Type:

Lightolier a Genlyte company www.lightolier.com
631 Airport Road, Fall River, MA 02720 • (508) 679-8131 • Fax (508) 674-4710
We reserve the right to change details of design, materials and finish.
© 2007 Genlyte Group LLC • C0507

LIGHTOLIER®